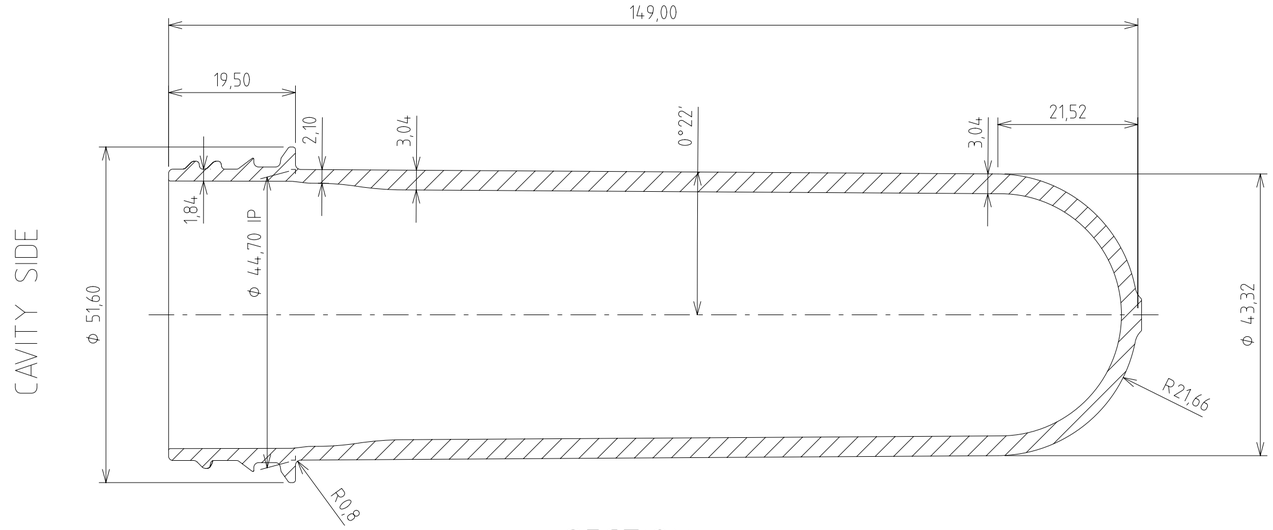

SECTION A-A SCALE 3:2

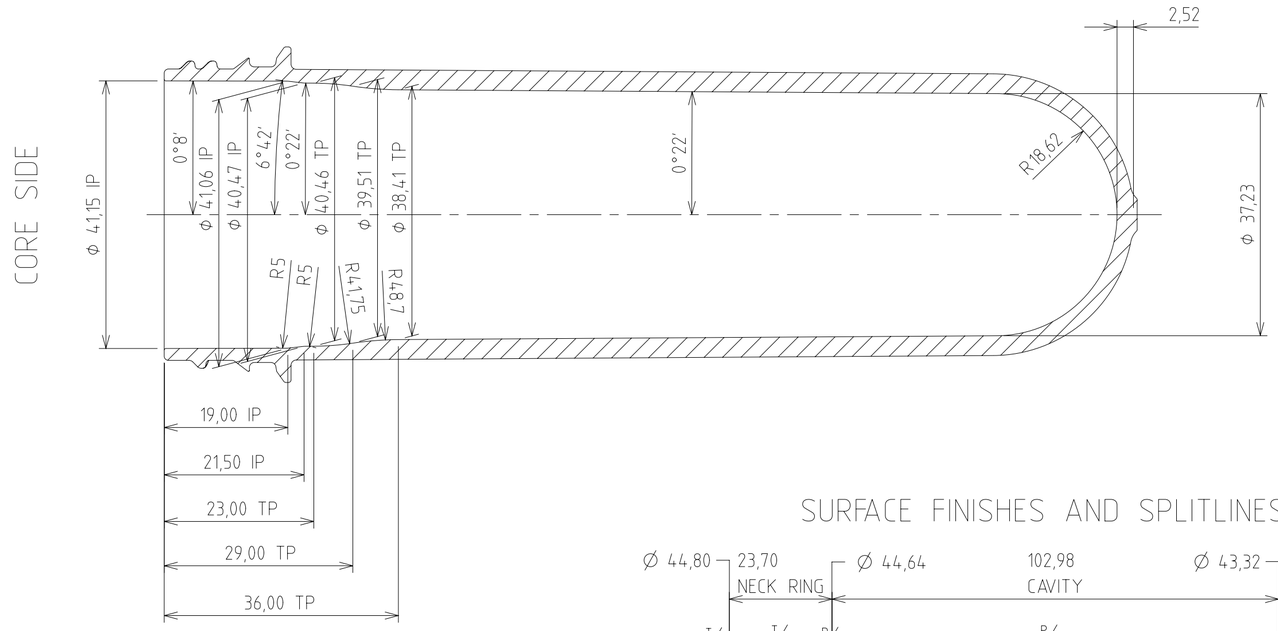

SURFACE FINISHES AND SPLITLINES

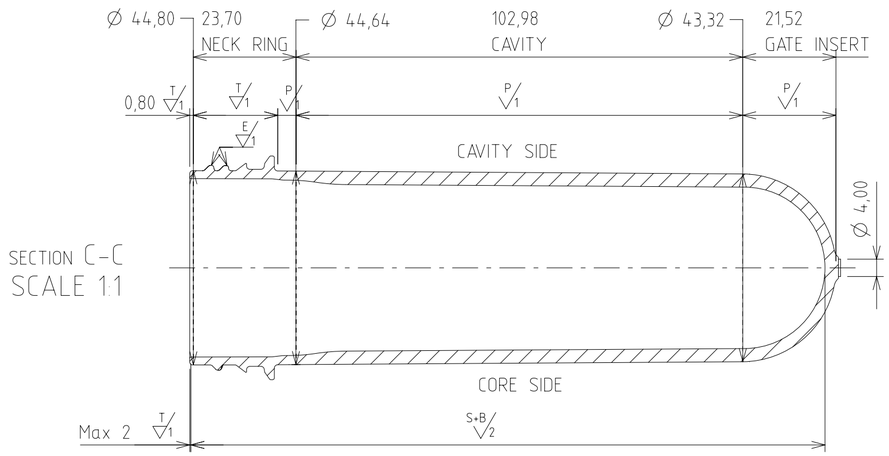

OPERATOR SIDE

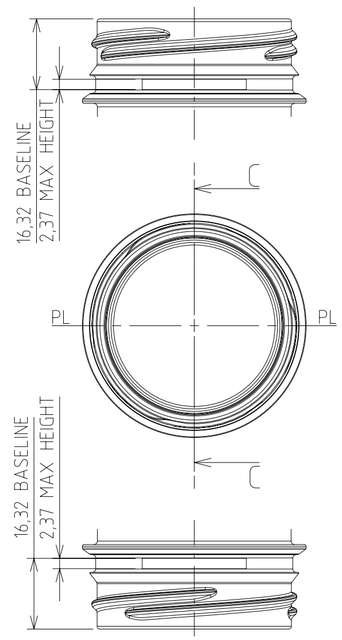

NON-OPERATOR SIDE

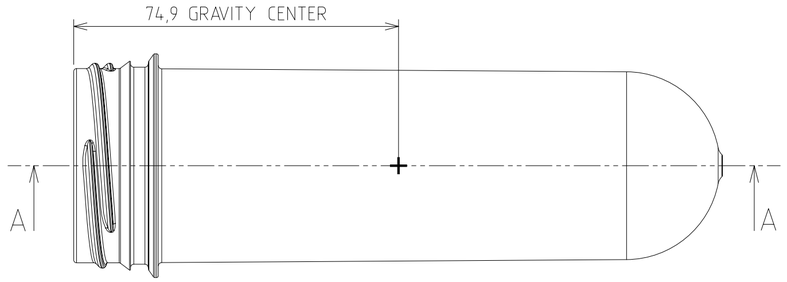

MOLDING SURFACE ENGRAVING DATA				
OPERATOR SIDE	TEXT	[-]	www.rapideu.com	
	FONT	[-]	OCR-B	
	HEIGHT	[mm]	2,0	
	DEPTH	[mm]	0.1	
NON OPERATOR SIDE	TEXT	[-]	CAVITY NUMBER	
			FROM	01
			TO	24
	FONT	[-]	OCR-B	
	HEIGHT	[mm]	2,0	
	DEPTH	[mm]	0.1	
SHOWN POSITIVE ON PLASTIC				

MOLDING SURFACE FINISHES		
T/1	=	Hard Turning
E/1	=	EDM
P/1	=	Polishing
S+B/2	=	B120 Shot Peening + Light Buffing

NOTES:

1) NECK FINISH WEIGHT 9,00g
2) THE FINISH COMPLY WITH DWG: 31.3.88.000
3) DENSITY FOR WEIGHT CALCULATION 1,335g/cm³
4) IP = INTERSECTION POINT
5) PL = PARTING LINE
6) TP = TANGENT POINT

VER	REV	DATE	DESCRIPTION	NAME
-	/			
-	/			
_02	/00	20/01/25	UPDATED ENGRAVING	M. DALLA LIBERA
_01	/00	10/01/25	BODY SHAPE CHANGED	M. DALLA LIBERA
_00	/00	16/12/24	FIRST ISSUE	M. DALLA LIBERA

DESCRIPTION:
48mm BERICAP
NECK FINISH
73,5g PREFORM

SCALE: 1:1

MATERIAL: PET

NOTES:

For prototyping tests, the surface finishing is valid only for the neck ring, for the rest the surface finishing will be polished.

SIPA

Date:	20-Jan-2025
Drawn:	Dalla Libera, M.
Checked:	Manunta,M.
Approved:	Pizzinat,T.

DRAWING N°: PN010108_02

CONFIDENTIAL

This document and the information herein included are SIPA SpA property and confidential. It is prohibited to reproduce it or to make it know in whole or in part to other parties without written authorization of SIPA SpA
Each modification must be comunicated and approved in written form by SIPA SpA